High Power
LED Flood Light
RSHPM-Series

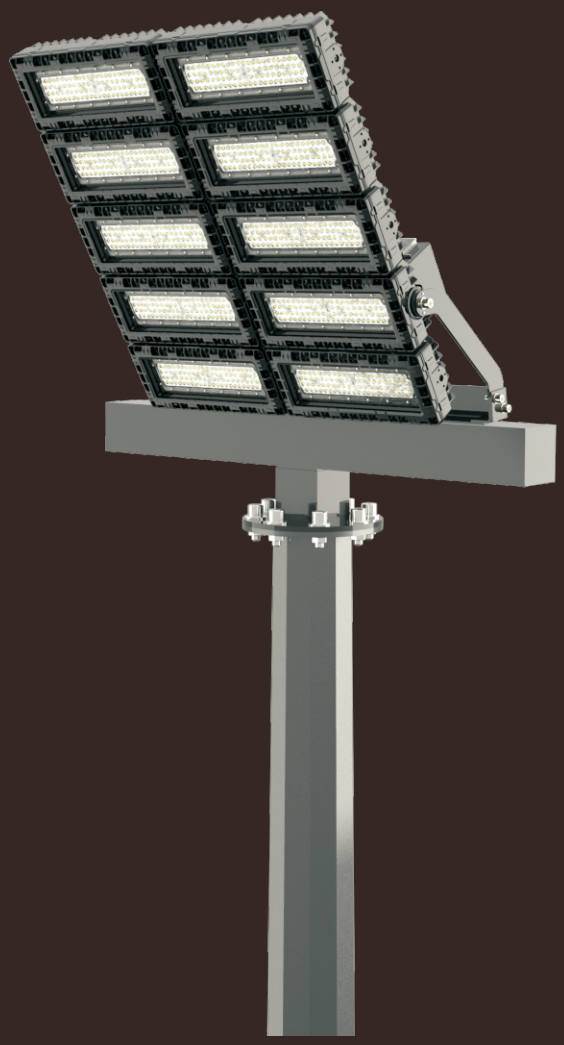

RISEN

Create value for you

RSHPM-Series

Overview

Up to 130Lm/W system efficacy
100-1000W,up to 3000W replacement

Modular design allows this fixture to get different power for different applications to realize the most economical solution

110-277Vac/347Vac/480Vac
Up to 20KV surge protection

Optical grade polycarbonate lens material
Accurate designed (15,40,60,90,120,30*70,45*85)degree lens specialized for outdoors lighting

IP66&IK08 resistance

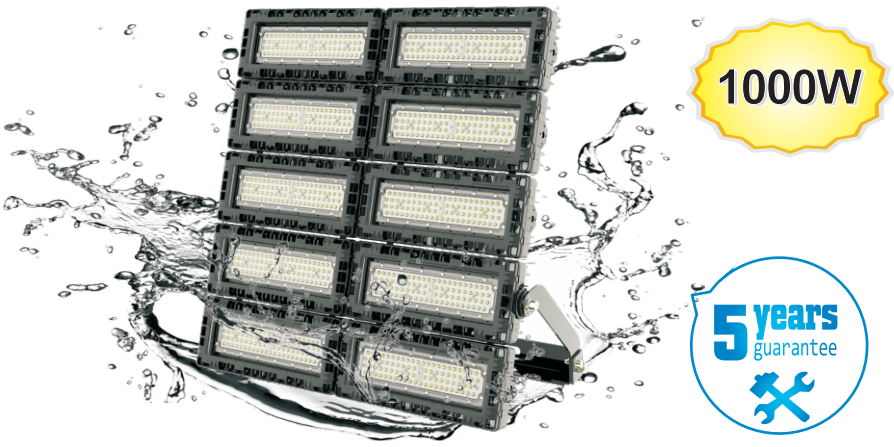

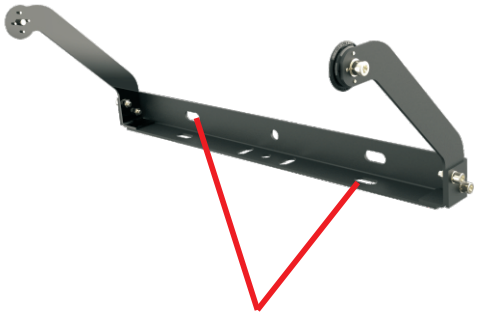

Multidimensional installation, dealing with different situations

Illumination

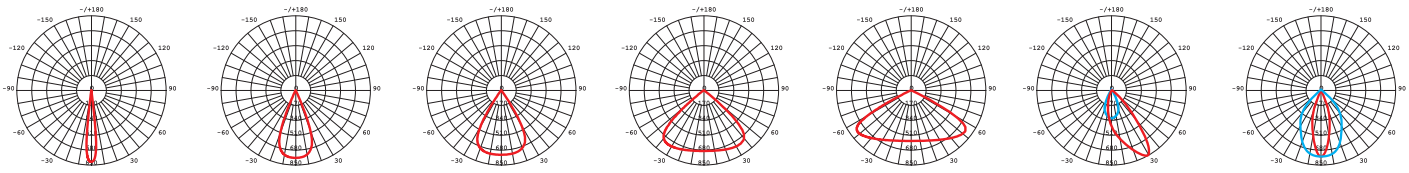

Lighting Dimensions

RSHPM-U-1-Series

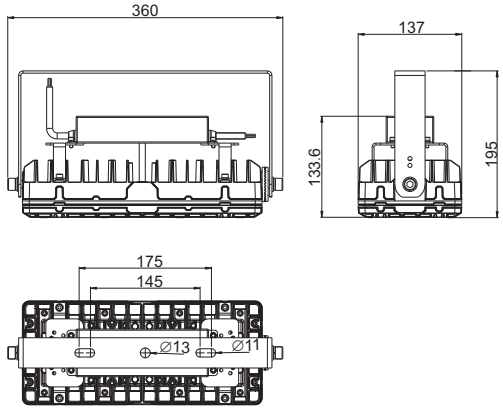

RSHPM-100W-U-1

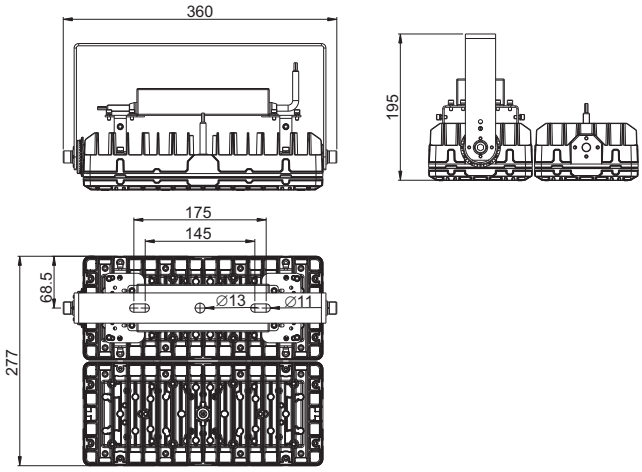

RSHPM-200W-U-1

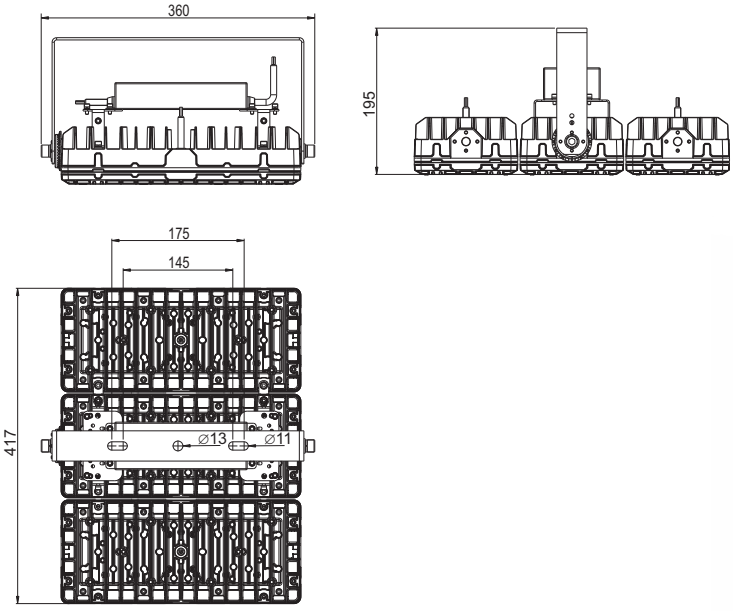

RSHPM-300W-U-1

RSHPM-L-Series

RSHPM-100W-L-1

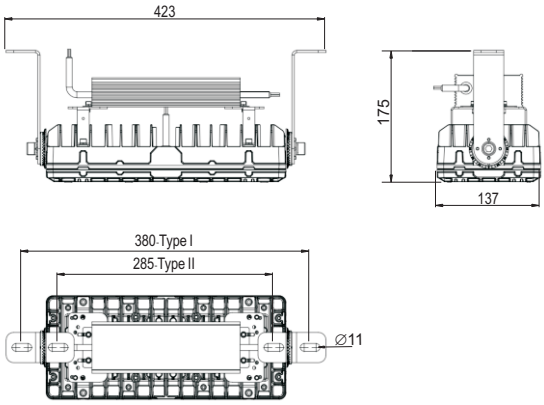

RSHPM-200W-L-1

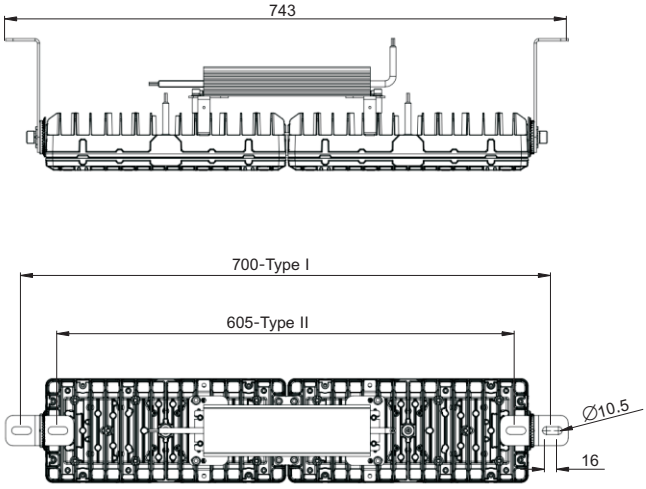

RSHPM-300W-L-1

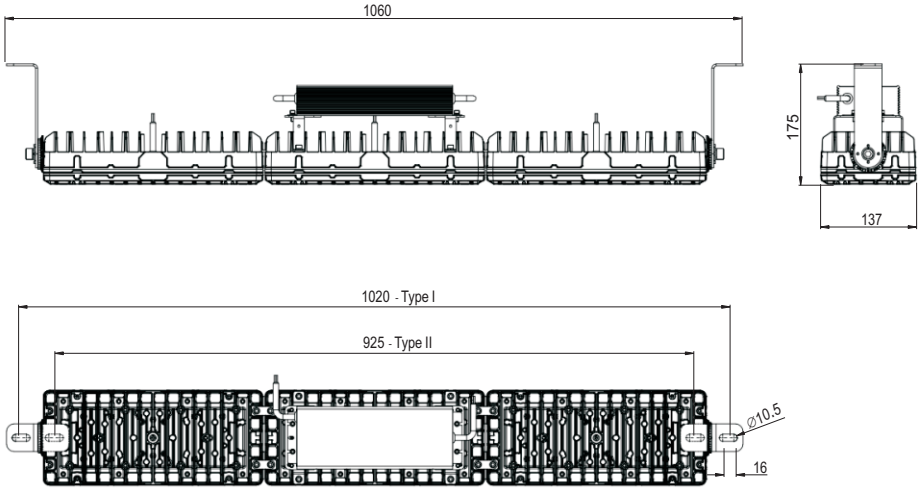

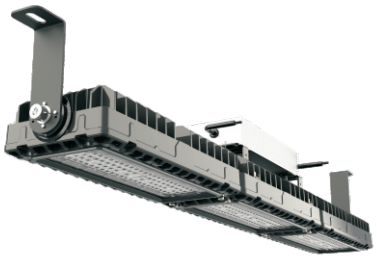

RSHPM-U-2-Series

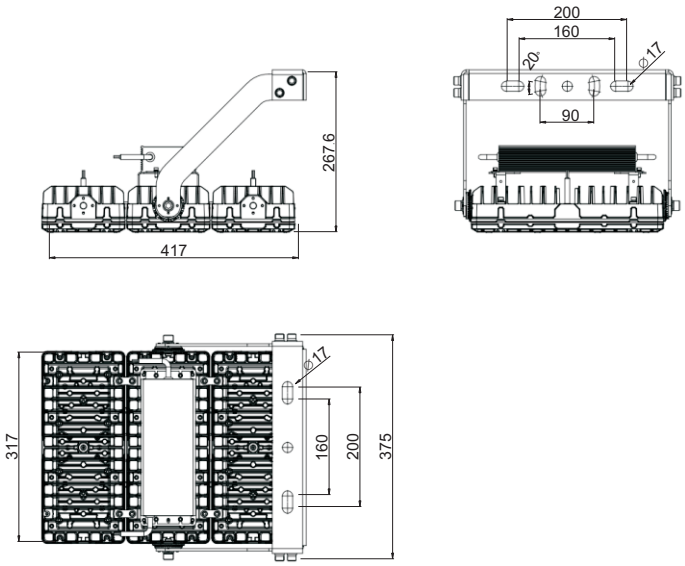

RSHPM-300W-U-2

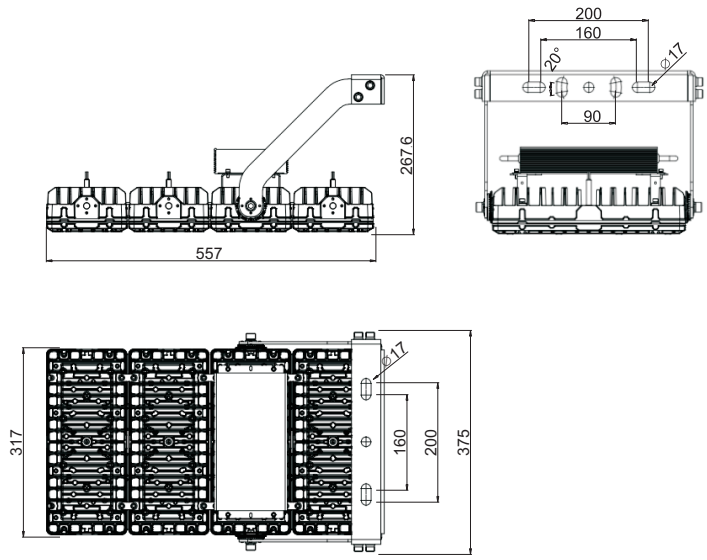

RSHPM-400W-U-2

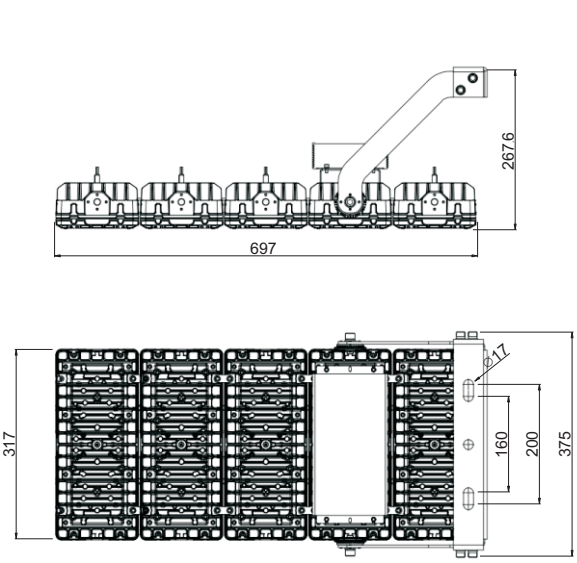

RSHPM-500W-U-2

RSHPM-U-2-Series

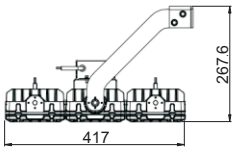

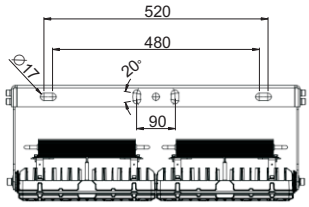

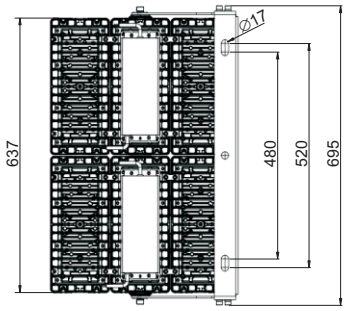

RSHPM-600W-U-2

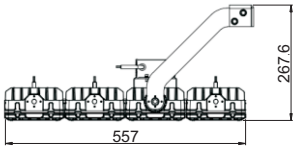

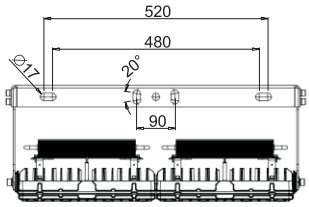

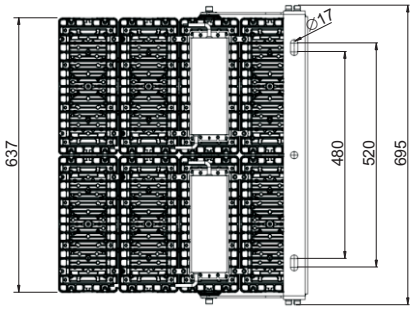

RSHPM-800W-U-2

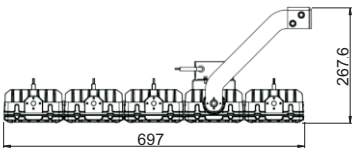

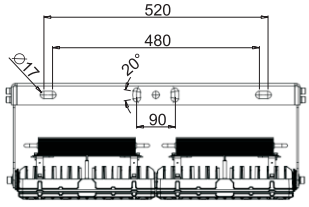

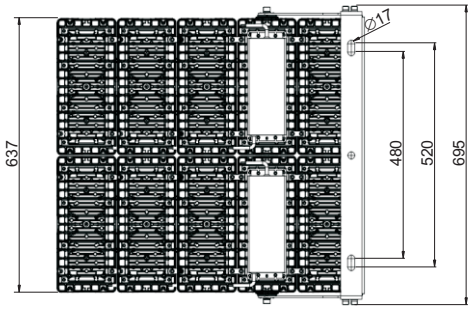

RSHPM-1000W-U-2

RSHPM-G-Series

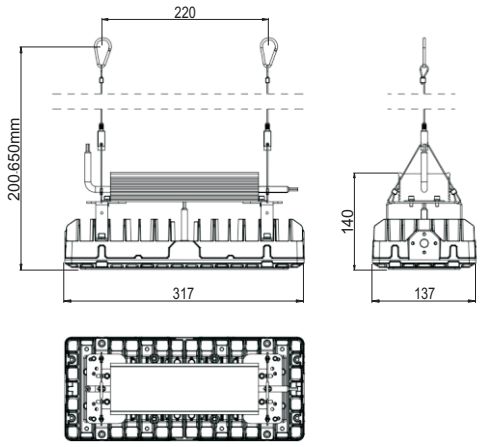

RSHPM-100W-G-1

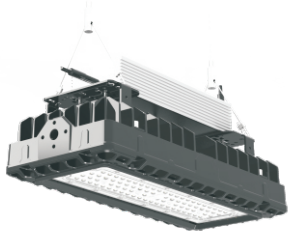

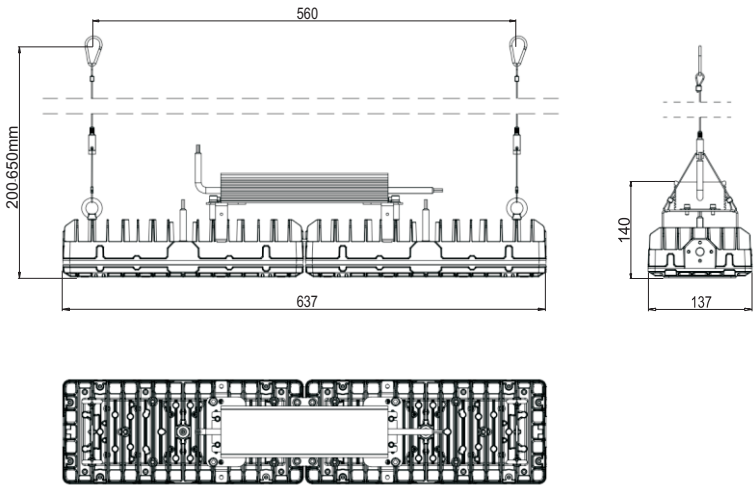

RSHPM-200W-G-1

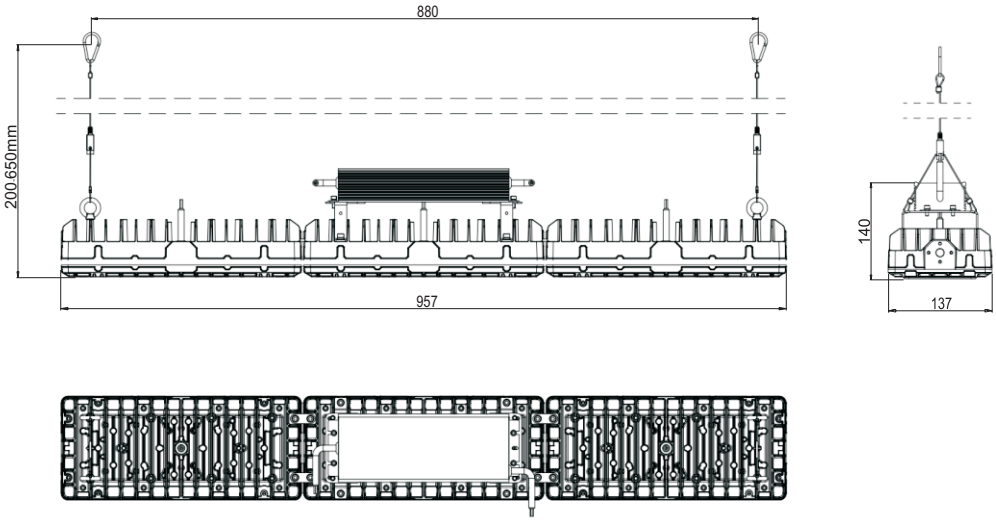

RSHPM-300W-G-1

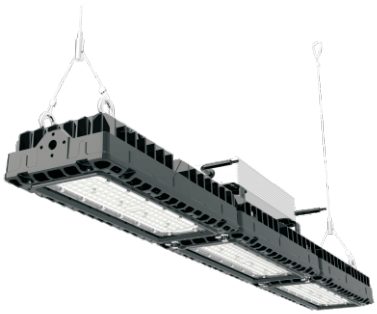

RSHPM-G-Series

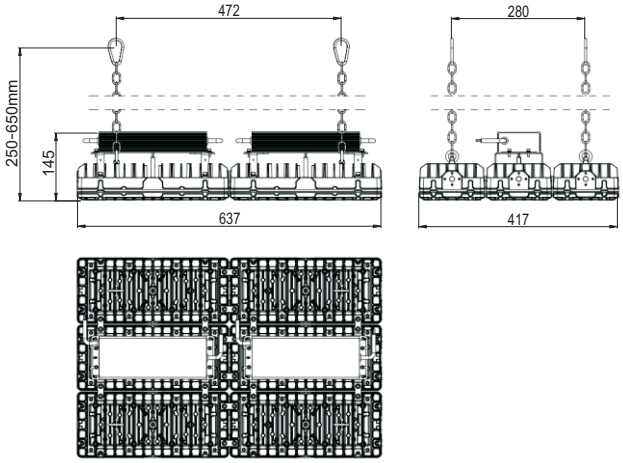

RSHPM-600W-G-1

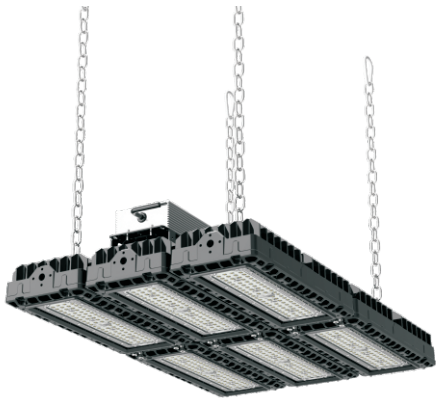

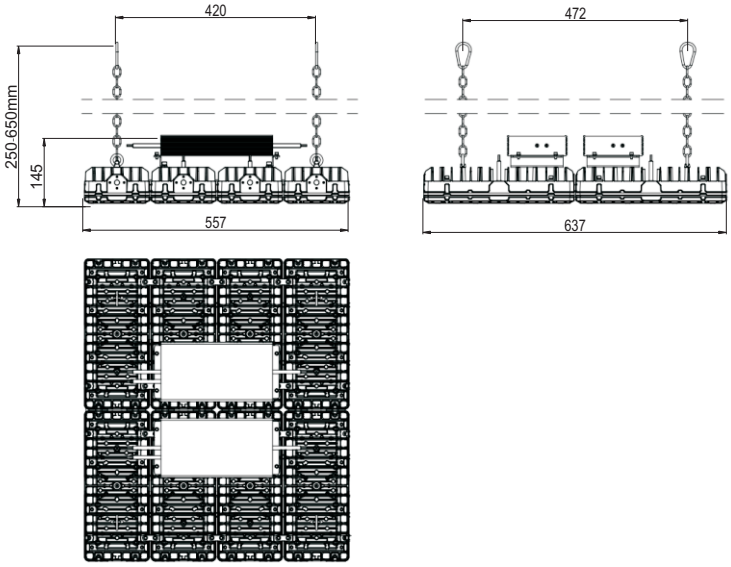

RSHPM-800W-G-1

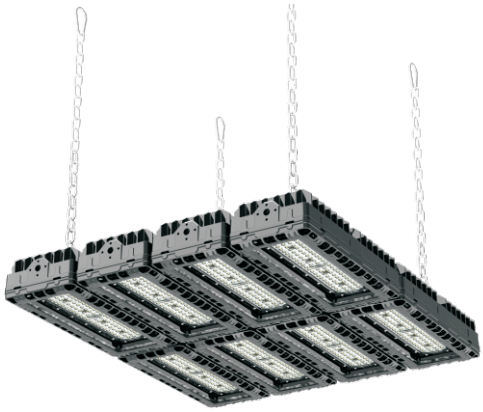

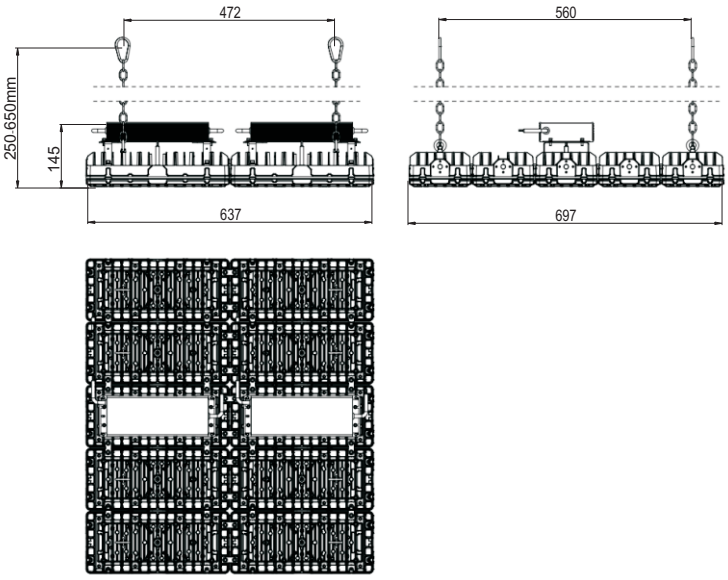

RSHPM-1000W-G-1

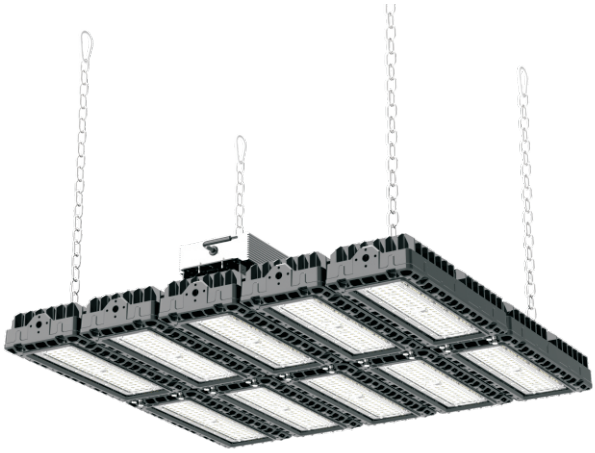

Parameter

RSHPM-U-1-Series(Weight and dimension include toughened glass)

Product Model	Power	Product Size(mm)	N.W.	Carton Size(mm)	G.W.	Input Voltage	System Efficacy	Beam Angle
RSHPM-100W-U-1	100W	360*137*194mm	4.6Kg	395*245*195mm	5.1Kg	110-277V/277-480V	130Lm/W	15/40/60/90/120/30*70
RSHPM-200W-U-1	200W	360*277*194mm	7.7Kg	385*355*195mm	8.8Kg	110-277V/277-480V	130Lm/W	15/40/60/90/120/30*70
RSHPM-300W-U-1	300W	360*417*194mm	11Kg	470*390*210mm	12.4Kg	110-277V/277-480V	130Lm/W	15/40/60/90/120/30*70

RSHPM-L-Series(Weight and dimension include toughened glass)

Product Model	Power	Product Size(mm)	N.W.	Carton Size(mm)	G.W.	Input Voltage	System Efficacy	Beam Angle
RSHPM-100W-L-1	100W	423*137*175mm	4.5Kg	395*245*195mm	5.1Kg	110-277V/277-480V	130Lm/W	15/40/60/90/120/30*70
RSHPM-200W-L-1	200W	743*137*175mm	7.1Kg	715*195*245mm	8.1Kg	110-277V/277-480V	130Lm/W	15/40/60/90/120/30*70
RSHPM-300W-L-1	300W	1060*137*175mm	10.2Kg	1035*195*245mm	11.7Kg	110-277V/277-480V	130Lm/W	15/40/60/90/120/30*70

RSHPM-U-2-Series(Weight and dimension include toughened glass)

Product Model	Power	Product Size(mm)	N.W.	Carton Size(mm)	G.W.	Input Voltage	System Efficacy	Beam Angle
RSHPM-300W-U-2	300W	417*375*268mm	11.6Kg	600*445*220mm	13.1Kg	110-277V/277-480V	130Lm/W	15/40/60/90/120/45*85
RSHPM-400W-U-2	400W	557*375*268mm	15.1Kg	610*390*220mm	16.6Kg	110-277V/277-480V	130Lm/W	15/40/60/90/120/45*85
RSHPM-500W-U-2	500W	697*375*268mm	17.3Kg	750*390*220mm	19.1Kg	110-277V/277-480V	130Lm/W	15/40/60/90/120/45*85
RSHPM-600W-U-2	600W	471*695*268mm	22.1Kg	765*600*220mm	24.6Kg	110-277V/277-480V	130Lm/W	15/40/60/90/120/45*85
RSHPM-800W-U-2	800W	577*695*268mm	29.1Kg	735*637*240mm	31.6Kg	110-277V/277-480V	130Lm/W	15/40/60/90/120/45*85
RSHPM-1000W-U-2	1000W	697*695*268mm	35Kg	735*755*240mm	38.2Kg	110-277V/277-480V	130Lm/W	15/40/60/90/120/45*85

RSHPM-G-Series(Weight and dimension include toughened glass)

Product Model	Power	Product Size(mm)	N.W.	Carton Size(mm)	G.W.	Input Voltage	System Efficacy	Beam Angle
RSHPM-100W-G-1	100W	317*137*140mm	4.5Kg	395*245*195mm	5.0Kg	110-277V/277-480V	130Lm/W	15/40/60/90/120/30*70
RSHPM-200W-G-1	200W	637*137*140mm	7.7Kg	715*195*245mm	8.8Kg	110-277V/277-480V	130Lm/W	15/40/60/90/120/30*70
RSHPM-200W-G-2	200W	317*277*140mm	7.1Kg	385*355*195mm	8.1Kg	110-277V/277-480V	130Lm/W	15/40/60/90/120/30*70
RSHPM-300W-G-1	300W	1063*137*140mm	10.2Kg	1035*195*245mm	12Kg	110-277V/277-480V	130Lm/W	15/40/60/90/120/30*70
RSHPM-300W-G-2	300W	317*417*140mm	10.1Kg	470*390*210mm	11.7Kg	110-277V/277-480V	130Lm/W	15/40/60/90/120/30*70
RSHPM-400W-G-1	400W	317*557*145mm	14.3Kg	610*375*200mm	15.7Kg	110-277V/277-480V	130Lm/W	15/40/60/90/120/30*70
RSHPM-500W-G-1	500W	317*697*145mm	17.3Kg	750*390*220mm	19.3Kg	110-277V/277-480V	130Lm/W	15/40/60/90/120/30*70
RSHPM-600W-G-1	600W	637*417*145mm	21.1Kg	690*470*200mm	23.2Kg	110-277V/277-480V	130Lm/W	15/40/60/90/120/30*70
RSHPM-800W-G-1	800W	637*577*145mm	27.8Kg	690*610*200mm	30.6Kg	110-277V/277-480V	130Lm/W	15/40/60/90/120/30*70
RSHPM-1000W-G-1	1000W	637*697*145mm	32.8Kg	690*750*200mm	36.8Kg	110-277V/277-480V	130Lm/W	15/40/60/90/120/30*70